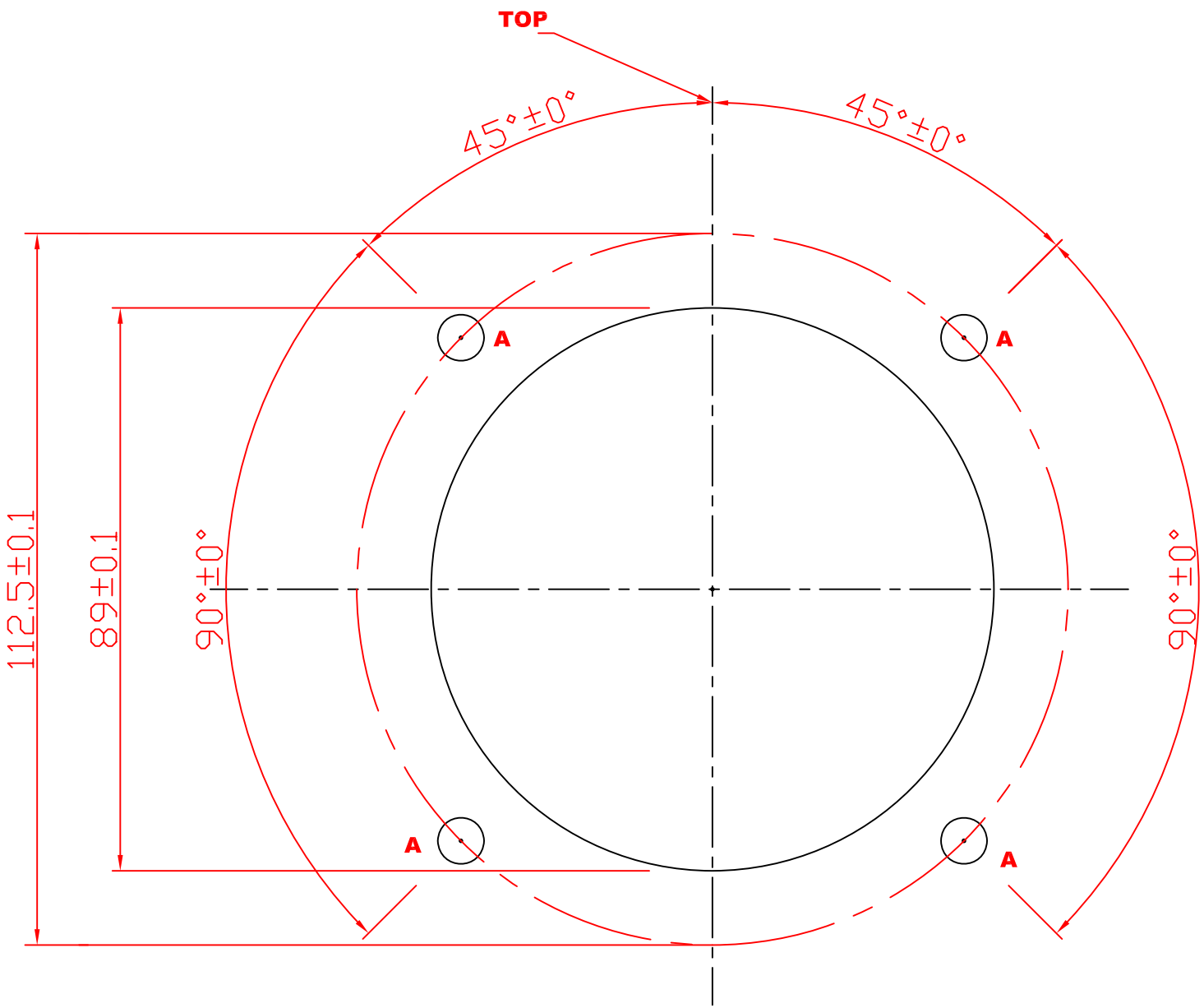


**NOTES**

1. **FIXING HOLES, MARKED "A" ARE TO BE DRILLED 3.7mm (9/64")**

HAWK I.R. INTERNATIONAL LTD.
117 HIGH STREET
MARSKE-BY-SEA
TS11 6JX
Tel :- 0044 (0) 1642 497000
Fax :- 0044 (0) 1642 497111

| Date | Rev | Drn | Chk | App | Description | Title |
|---|---|---|---|---|---|---|
| 18/09/05 | A | AJH | | | 100mm DRILLING TEMPLATE | DIMENSIONED DRAWING |
| | | | | | | |
| | | | | | | |
| | | | | | | |
| | | | | | | DRG No. HI100-CNC |