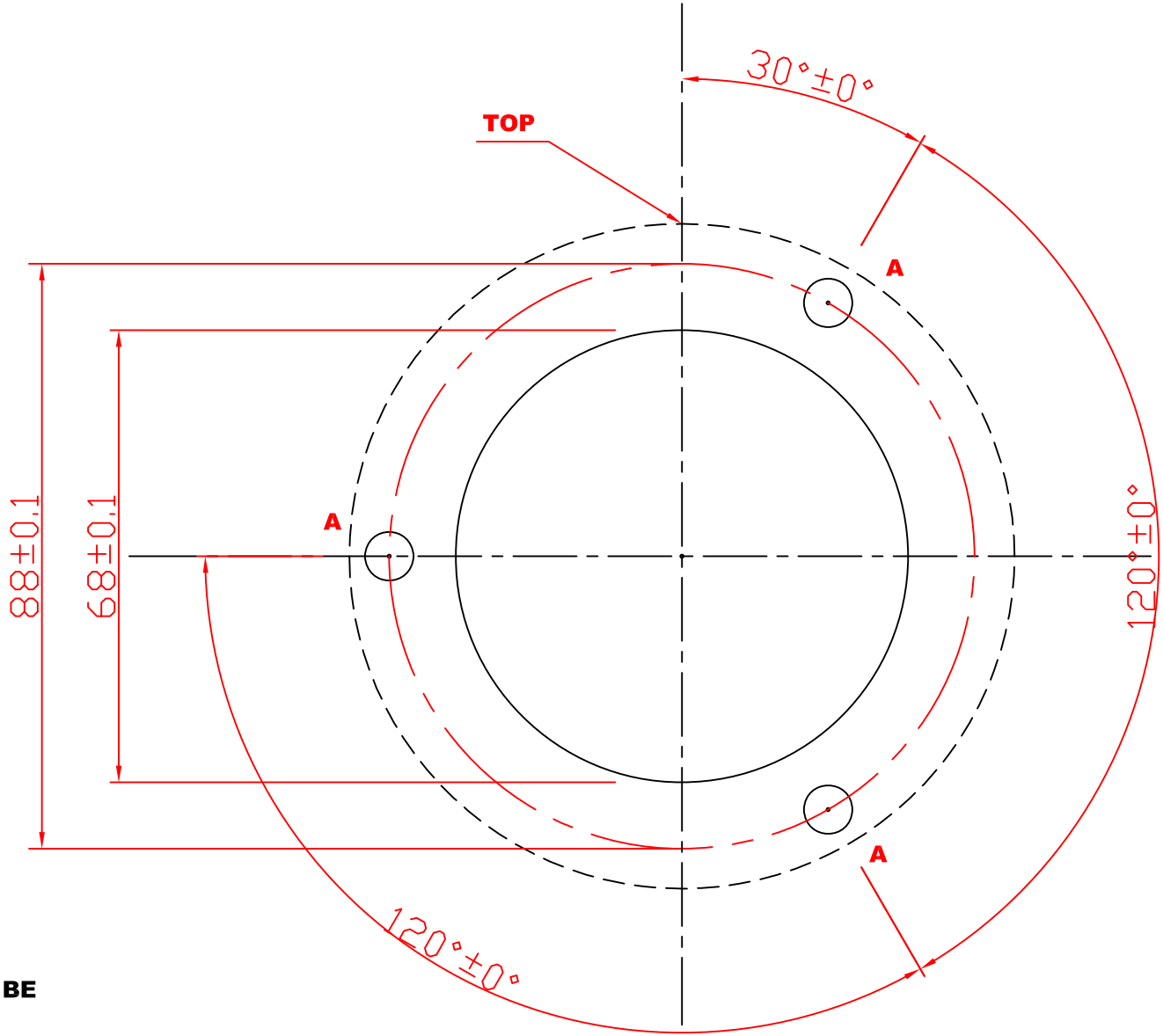

NOTES

1. **FIXING HOLES, MARKED "A" ARE TO BE DRILLED 3.7mm (9/64")**

HAWK I.R. INTERNATIONAL LTD.
117 HIGH STREET
MARSKE-BY-SEA
TS11 6JX
Tel :- 0044 (0) 1642 497000
Fax :- 0044 (0) 1642 497111

Date	Rev	Drn	Chk	App	Description	Title
18/09/05	A	AJH			75mm DRILLING TEMPLATE	DIMENSIONED DRAWING
						DRG No. HI75-CNC